Sairam961 / EXP-1

Code Pull requests Actions Projects Wiki Security Insights

main EXP-1 / README.md

Sairam961 Update README.md 2b2792d · now

66 lines (45 loc) · 1.92 KB

EXP-1

EXPT NO: 1 VERIFICATION OF KIRCHHOFF'S LAWS AIM a. To verify Kirchhoff's Voltage Law (KVL) for the given circuit. b. To verify Kirchhoff's Current Law (KCL) for the given circuits.

APPARATUS REQUIRED: S.No. Components Range Quantity 1 Resistor 1kΩ 3 2 Voltmeter (DC) 0-30V 3 3 Ammeter (DC) (0-200)mA 3 4 Bread Board 1 5 Regulated Power Supply (0-30)V 1 6 Connecting wires As required

THEORY: KVL: Kirchhoff's voltage law states that the sum of the voltage differences around any closed loop in a circuit must be zero. A loop in a circuit is any path that ends at the same point at which it starts. KCL: Kirchhoff's Current Law (KCL) Kirchhoff's Current Law states that the algebraic sum of the currents entering and leaving a node is equal to zero. By convention, currents entering the node are positive, and those leaving a node are negative

PROCEDURE: a. KVL:

1. Connect as per the circuit diagram.
2. Check if the RPS voltage is set to zero voltage.
3. Check all the meters for null position.
4. Switch on the RPS.
5. Set the input voltage to a value between 0V to 30V.
6. Record the voltage values shown in the voltmeter connected across each resistor.
7. Take readings for different values of input voltage and tabulate them.

b. KCL:

1. Connect as per the circuit diagram.
2. Check if the RPS voltage is set to zero voltage.
3. Check all the meters for null position.
4. Switch on the RPS.
5. Set the input voltage to a value between 0V to 30V.
6. Record the voltage values shown in the ammeter connected to each resistor.
7. Take readings for different values of input voltage and tabulate them.

CIRCUIT DIAGRAM:

a. KVL:

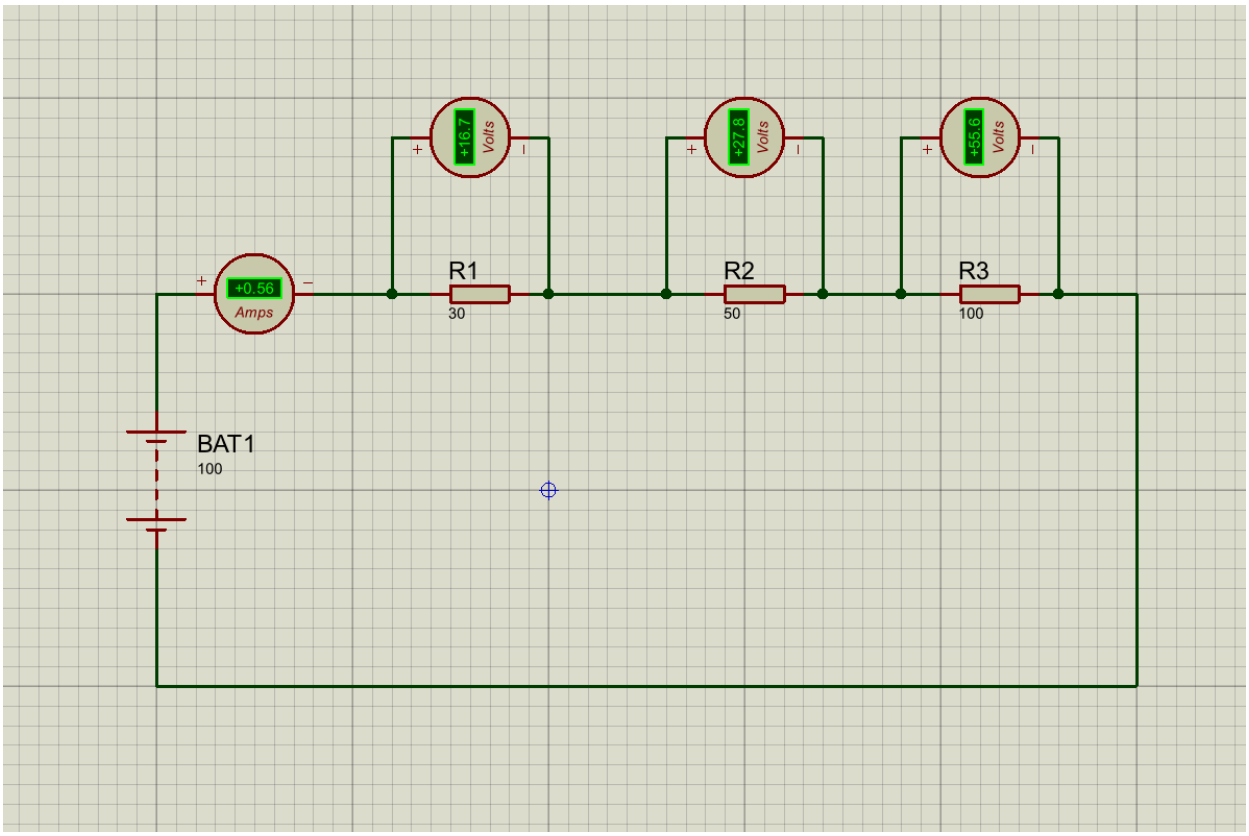

b. KCL:

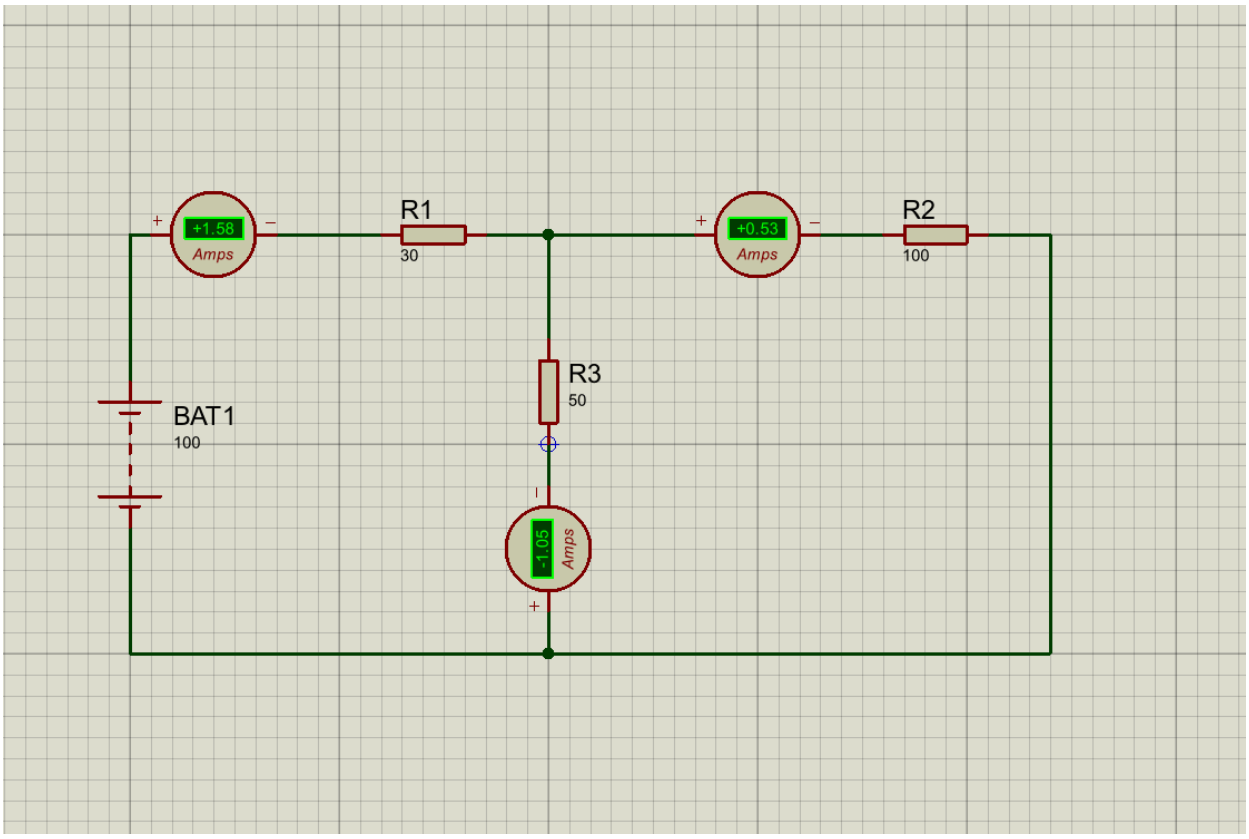

KVL AND KCL

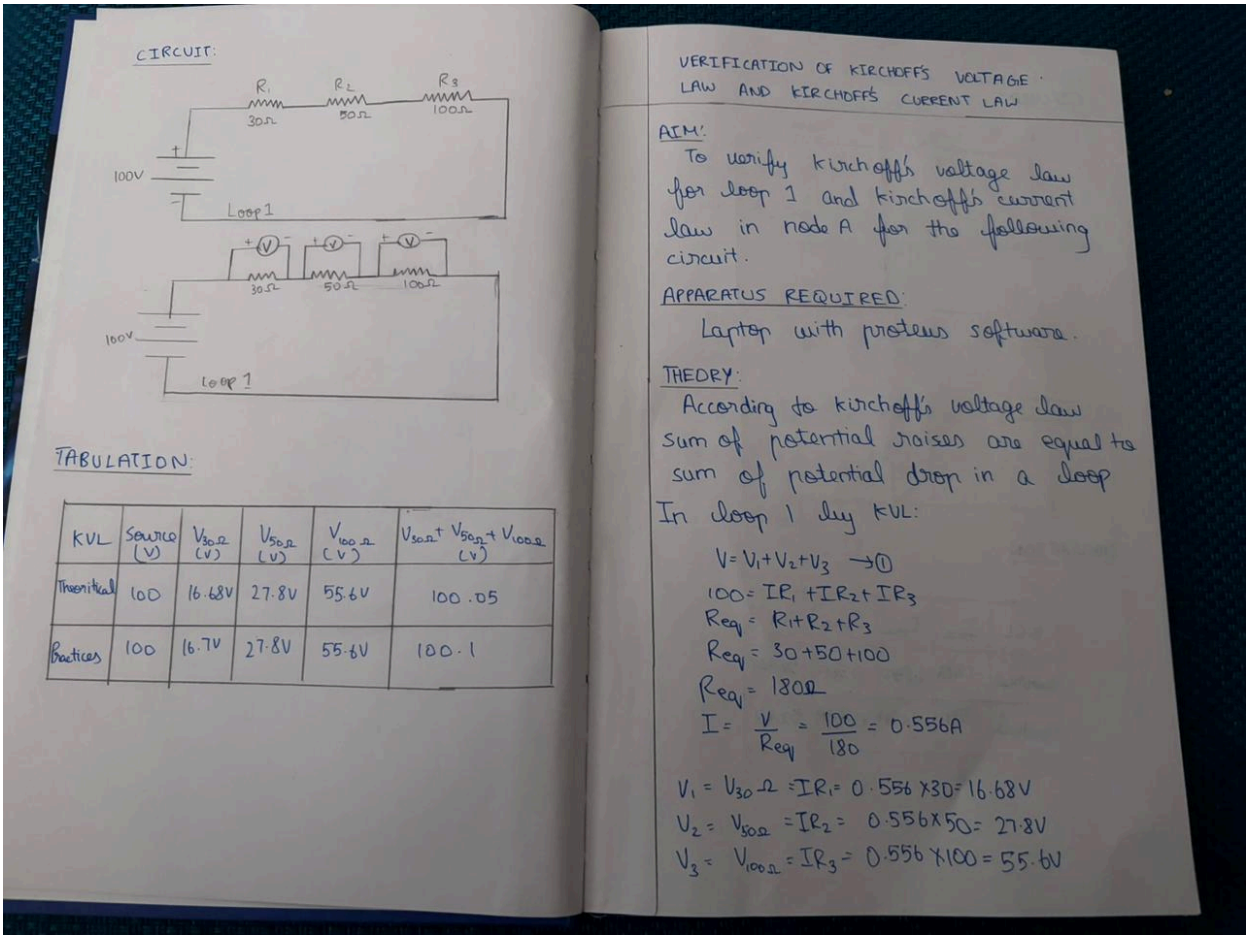

CIRCUIT:

TABULATION:

KVL	Source (V)	$V_{30\Omega}$ (V)	$V_{50\Omega}$ (V)	$V_{100\Omega}$ (V)	$V_{30\Omega}+V_{50\Omega}+V_{100\Omega}$ (V)
Theoritical	100	16.68V	27.8V	55.6V	100.05
Practices	100	16.7V	27.8V	55.6V	100.1

VERIFICATION OF KIRCHOFF'S VOLTAGE LAW AND KIRCHOFF'S CURRENT LAW

AIM:

To verify kirchoff's voltage law for loop 1 and kirchoff's current law in node A for the following circuit.

APPARATUS REQUIRED:

Laptop with proteus software.

THEORY:

According to kirchoff's voltage law sum of potential raises are equal to sum of potential drop in a loop

In loop 1 by KVL:

$V = V_1 + V_2 + V_3 \rightarrow (1)$

$100 = IR_1 + IR_2 + IR_3$

$R_{eq} = R_1 + R_2 + R_3$

$R_{eq} = 30 + 50 + 100$

$R_{eq} = 180\Omega$

$I = \frac{V}{R_{eq}} = \frac{100}{180} = 0.556A$

$V_1 = V_{30\Omega} = IR_1 = 0.556 \times 30 = 16.68V$

$V_2 = V_{50\Omega} = IR_2 = 0.556 \times 50 = 27.8V$

$V_3 = V_{100\Omega} = IR_3 = 0.556 \times 100 = 55.6V$

CIRCUIT:

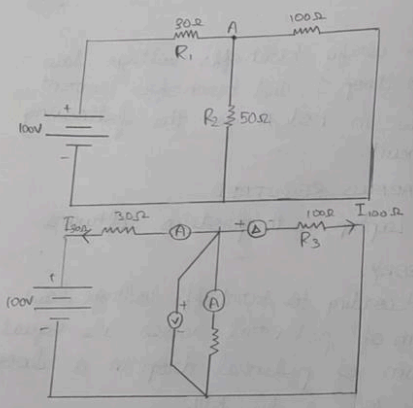

TABULATION:

KCL	$I_{30\Omega}$	$I_{50\Omega}$	$I_{100\Omega}$	V_A
Theoritical	-1.48A	1.85A	0.56A	52.63V
Practical	1.58A	1.05A	0.53A	52.6V

Substitute V_1, V_2 and V_3 values in ①

$100 = 16.88 + 27.8 + 55.6$

$100V = 100V$

Hence proved

KIRCHOFFS CURRENT LAW:

In a junction, incoming current is equal to outgoing current.

At node A

$$I_{30\Omega} + I_{50\Omega} + I_{100\Omega} = 0$$

$$\frac{V-100}{30} + \frac{V}{50} + \frac{V}{100} = 0$$

$$V\left[\frac{1}{30} + \frac{1}{50} + \frac{1}{100}\right] - \frac{100}{30} = 0$$

$$V[0.0633] - 3.333 = 0$$

$$V = \frac{3.333}{0.0633}$$

$$V = 52.63V$$

$$I_{30\Omega} = \frac{V-100}{30} = \frac{52.63-100}{30} = -1.58A$$

$$I_{50\Omega} = \frac{V}{50} = \frac{52.63}{50} = 1.05A$$

$$I_{100\Omega} = \frac{V}{100} = \frac{52.63}{100} = 0.53A$$

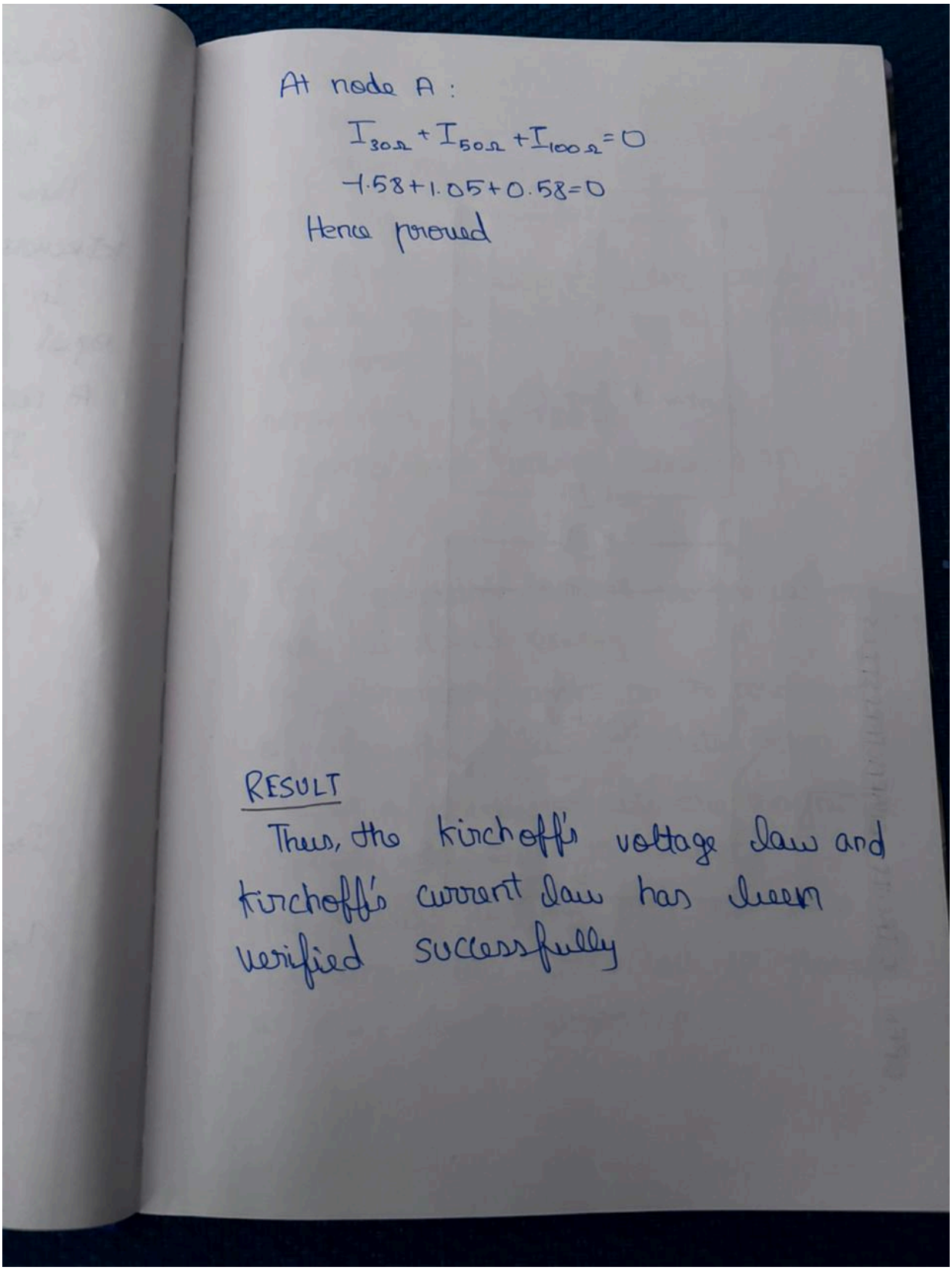

At node A :

$I_{30\Omega} + I_{50\Omega} + I_{100\Omega} = 0$

$-1.58 + 1.05 + 0.58 = 0$

Hence proved

RESULT

Thus, the kirchoff's voltage law and kirchoff's current law has been verified successfully

RESULT:

Thus, for the given circuit, Kirchhoff's Laws, (a) KVL and (b) KCL are proved.